G BSP

METAL WORK PNEUMATIC

SINGLE RING (R13)

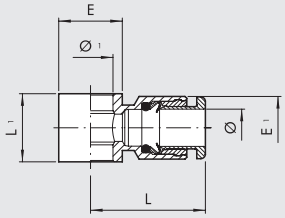

Code	Ref.	Ø	Ø 1	L	L1	E	E1
2012A02	R13	3	M5	12.9	9	9	7
2012A01	R13	3.17	M5	12.9	9	9	7
2012001	RL13	4	M5	20.2	9	9.5	9.5
2012002	RL13	4	1/8	21.3	15	14	9.5
2012003	R13	5	M5	23.8	9	9.5	12
2012004	R13	5	1/8	24.8	15	14	12
2012005	RL13	6	1/8	23	15	14	11.5
2012006	RL13	6	1/4	24.5	17	18	11.5
2012007	RL13	8	1/8	24.8	15	14	13.8
2012008	RL13	8	1/4	26.5	17	18	13.8
2012009	RL13	8	3/8	28.5	20	21	13.8
2012010	RL13	10	1/4	31.4	17	18	16.5
2012011	RL13	10	3/8	32.8	20	21	16
2012013	RL13	12	1/4	33	17	18	19.5
2012012	RL13	12	3/8	35.3	20	21	19.5
2012014	RL13	12	1/2	37	24	26	19.5
2012017	RL13	14	1/2	35	24	26	22

For the rods series D, see page **D2**.15

DUAL RING (R14)

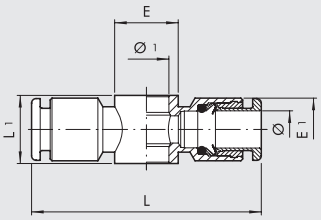

Code	Ref.	Ø	Ø 1	L	L1	E	E1
2013001	RL14	4	M5	40.4	9	9.5	9.5
2013002	RL14	4	1/8	42.6	15	14	9.5
2013003	R14	5	M5	48	9	9.5	12
2013004	R14	5	1/8	49.5	15	14	13.5
2013005	RL14	6	1/8	46	15	14	11.5
2013006	RL14	6	1/4	49	17	18	11.5
2013007	RL14	8	1/8	49.6	15	14	13.8
2013008	RL14	8	1/4	53	17	18	13.8
2013009	RL14	8	3/8	57	20	21	13.8
2013010	RL14	10	1/4	62.8	17	18	16.5
2013011	RL14	10	3/8	65.6	20	21	16

For the rods series D, see page **D2**.15

ROD, MALE SINGLE ROTARY RING (R15)

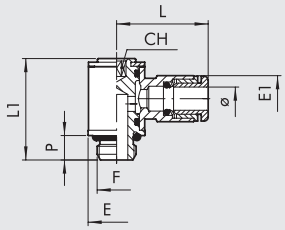

Code	Ref.	Ø	F	CH	P	L	L1	E	E1
2014101	R15	3	M3	1.5	3	12.2	13.2	5.8	5.8
2014102	R15	3.17	M3	1.5	3	12.2	13.2	5.8	5.8
2014103	R15	3	M5	2	3.5	12.7	13.7	5.8	7
2014104	R15	3.17	M5	2	3.5	12.7	13.7	5.8	7
2L14001	RL15	4	M5	2	4	20.2	18.4	9.5	9.5
2L14020	RL15	4	M7	3	5	20.2	18.5	9.8	9.5
2L14002	RL15	4	1/8	3	6	21.3	24.9	14	9.5
2014003	R15	5	M5	2	4	24	19	9.9	12
2014004	R15	5	1/8	3	6	25	27	14	12
2L14106	RL15	6	M5	2	4	23.5	18.4	9.5	11.3
2L14021	RL15	6	M7	3	5	23.5	18.5	9.8	11.3
2L14005	RL15	6	1/8	3	6	23	24.9	14	11.5
2L14007	RL15	6	1/4	4	8	24.5	29.4	18	11.5
2L14006	RL15	8	1/8	3	6	24.8	24.9	14	13.8
2L14008	RL15	8	1/4	4	8	26.5	29.4	18	13.8
2L14013	RL15	8	3/8	5	9	28.5	35.6	22	13.8
2L14009	RL15	10	1/4	4	8	31.4	29.4	18	16.5
2L14014	RL15	10	3/8	5	9	32.8	35.6	22	16
2014010	RL15	12	1/4	4	8	33	29.4	18	19.5
2014011	RL15	12	3/8	5	9	35.3	35.6	22	19.5
2014012	RL15	12	1/2	8	11	37	40.8	26	19.5
2014015	RL15	14	1/2	8	11	35	40.8	26	22

G BSP

METAL WORK PNEUMATIC

TRIPLE ROD DUAL ROTARY RINGS (R53)

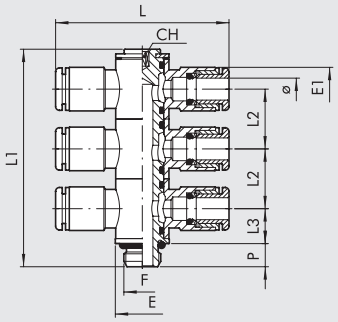

Code	Ref.	Ø	F	CH	E	E1	L	L1	L2	L3	P
2L53002	RL53	4	1/8	3	14	9.5	40.2	56.7	15.5	9.1	6
2L53008	RL53	6	1/8	3	14	11.3	47	56.7	15.5	9.1	6
2L53009	RL53	6	1/4	4	18	11.5	46	64.3	17.2	10.2	8
2L53010	RL53	8	1/8	3	14	13.8	49.6	56.7	15.5	9.1	6
2L53011	RL53	8	1/4	4	18	13.8	53	64.3	17.2	10.2	8
2L53013	RL53	10	1/4	4	18	16.5	62.8	64.3	17.2	10.2	8

MALE ROD, SINGLE SWIVEL RING (R54)

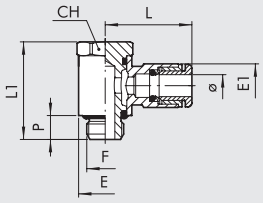

Code	Ref.	Ø	F	CH	E	E1	L	L1	P
2L54001	RL54	4	M5	9	9.5	9.5	20.2	18.7	4.5
2L54002	RL54	4	1/8	13	14	9.5	21.3	25.3	6.2
2L54007	RL54	6	M5	9	9.5	11.3	23.5	18.7	4.5
2L54008	RL54	6	1/8	13	14	11.5	23	25.3	6.2
2L54009	RL54	6	1/4	16	18	11.5	24.5	29.2	8
2L54010	RL54	8	1/8	13	14	13.8	24.8	25.3	6.2
2L54011	RL54	8	1/4	16	18	13.8	26.5	29.2	8
2L54012	RL54	8	3/8	20	21	13.8	28.5	35.4	9
2L54013	RL54	10	1/4	16	18	16.5	31.4	29.2	8
2L54014	RL54	10	3/8	20	21	16	32.8	35.4	9
2L54018	RL54	12	1/4	16	18	19.5	33	29.2	8
2L54016	RL54	12	3/8	20	21	19.5	35.3	35.4	9
2L54017	RL54	12	1/2	25	26	19.5	37	40	11
2L54020	RL54	14	1/2	25	26	22	35	40	11

MALE ROD, DUAL SWIVEL RING (R55)

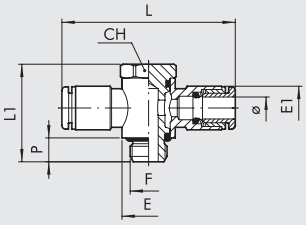

Code	Ref.	Ø	F	CH	E	E1	L	L1	P
2L55001	RL55	4	M5	9	9.5	9.5	40.4	18.7	4.5
2L55002	RL55	4	1/8	13	14	9.5	42.6	25.3	6
2L55007	RL55	6	M5	9	9.5	11.3	47	18.7	4.5
2L55008	RL55	6	1/8	13	14	11.5	46	25.3	6
2L55009	RL55	6	1/4	16	18	11.5	49	29.2	8
2L55010	RL55	8	1/8	13	14	13.8	49.6	25.3	6
2L55011	RL55	8	1/4	16	18	13.8	53	29.2	8
2L55012	RL55	8	3/8	20	21	13.8	57	35.4	9
2L55013	RL55	10	1/4	16	18	16.5	62.8	29.2	8
2L55014	RL55	10	3/8	20	21	16	65.6	35.4	9
2L55018	RL55	12	1/4	16	18	19.5	66	29.2	8
2L55016	RL55	12	3/8	20	21	19.5	70.6	35.4	9
2L55017	RL55	12	1/2	25	26	19.5	74	40	11

G
BSP

DUAL ROD, MALE SINGLE SWIVEL RINGS (R56)

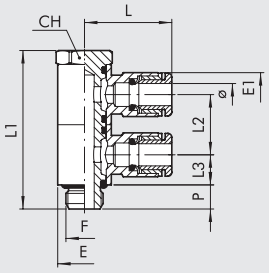

Code	Ref.	Ø	F	CH	E	E1	L	L1	L2	L3	P
2L56001	RL56	4	M5	9	9.5	9.5	20.2	30.2	11.5	5.8	4.5
2L56002	RL56	4	1/8	13	14	9.5	21.3	41	15.5	7.8	6
2L56007	RL56	6	M5	9	9.5	11.3	23.5	30.2	11.5	5.8	4.5
2L56008	RL56	6	1/8	13	14	11.5	23	41	15.5	7.8	6
2L56009	RL56	6	1/4	16	18	11.5	24.5	46.4	17.2	8.6	8
2L56010	RL56	8	1/8	13	14	13.8	24.8	41	15.5	7.8	6
2L56011	RL56	8	1/4	16	18	13.8	26.5	46.4	17.2	8.6	8
2L56012	RL56	8	3/8	20	21	13.8	28.5	56.8	21.4	10.7	9
2L56013	RL56	10	1/4	16	18	16.5	31.4	46.4	17.2	8.6	8
2L56014	RL56	10	3/8	20	21	16	32.8	56.8	21.4	10.7	9
2L56016	RL56	12	3/8	20	21	19.5	35.3	56.8	21.4	10.7	9
2L56017	RL56	12	1/2	25	26	19.5	37	64	24	12	11
2L56020	RL56	14	1/2	25	26	22	35	64	24	12	11

DUAL ROD, MALE DUAL SWIVEL RINGS (R57)

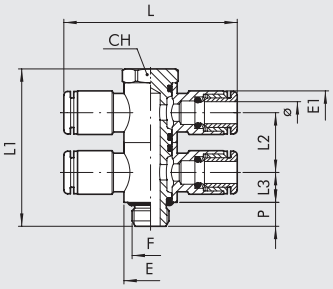

Code	Ref.	Ø	F	CH	E	E1	L	L1	L2	L3	P
2L57001	RL57	4	M5	9	9.5	9.5	40.4	30.2	11.5	5.8	4.5
2L57002	RL57	4	1/8	13	14	9.5	42.6	41	15.5	7.8	6
2L57007	RL57	6	M5	9	9.5	11.3	47	30.2	11.5	5.8	4.5
2L57008	RL57	6	1/8	13	14	11.5	46	41	15.5	7.8	6
2L57009	RL57	6	1/4	16	18	11.5	49	46.4	17.2	8.6	8
2L57010	RL57	8	1/8	13	14	13.8	49.6	41	15.5	7.8	6
2L57011	RL57	8	1/4	16	18	13.8	53	46.4	17.2	8.6	8
2L57012	RL57	8	3/8	20	21	13.8	57	56.8	21.4	10.7	9
2L57013	RL57	10	1/4	16	18	16.5	62.8	46.4	17.2	8.6	8
2L57014	RL57	10	3/8	20	21	16	65.6	56.8	21.4	10.7	9
2L57016	RL57	12	3/8	20	21	19.5	70.6	56.8	21.4	10.7	9
2L57017	RL57	12	1/2	25	26	19.5	74	64	24	12	11

TAPERED THREAD BRASS FITTINGS WITH PTFE

Metal Work can supply fittings with a tapered thread coated in
polytetrafluorethylene. This system provides the pneumatic seal between the fitting and the female thread. It is therefore not necessary to add other sealing systems during assembly, such as adhesives or Teflon tape. This significantly reduces assembly times. The physical and technical features of the material used ensure that the properties are maintained through time and in a wide range of operating temperatures.
This coating can be used with push-in fittings type R1C, R31C, R32C and R39C that have a G1/8 to G1/2 taper thread.

KEY TO CODES
Fittings with a PTFE thread have the same code as the standard fitting, with the addition of the suffix **T**.
For example RL1C 8 3/8 fitting has code **2L01C11**, so the PTFE version has code **2L01C11T**.

METAL WORK PNEUMATIC

MRF COMPACT "O" ANELLO IN OTTONE

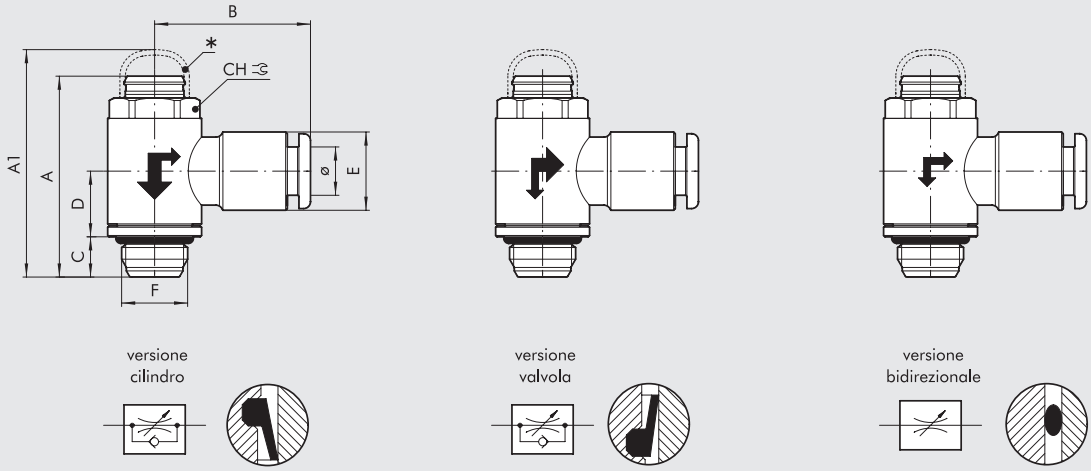

* CAPPUCCIO ANTIMANOMISSIONE OPZIONALE

Codice	Descrizione	F	Ø	CH	A min	A max	A1	B	C	D	E
9001001C	MRF O M C 4 M5	M5	4	9	23.9	25	26.5	20.2	4	9.2	9.5
9001110V	MRF O M V 4 M5	M5	4	9	23.9	25	26.5	20.2	4	9.2	9.5
9001601B	MRF O M B 4 M5	M5	4	9	23.9	25	26.5	20.2	4	9.2	9.5
9001002C	MRF O M C 5 M5	M5	5	9	23.9	25	26.5	23.8	4	9.2	12
9001113V	MRF O M V 5 M5	M5	5	9	23.9	25	26.5	23.8	4	9.2	12
9001603B	MRF O M B 5 M5	M5	5	9	23.9	25	26.5	23.8	4	9.2	12
9001007C	MRF O M C 6 M5	M5	6	9	23.9	25	26.5	23.5	4	9.2	11.3
9001105V	MRF O M V 6 M5	M5	6	9	23.9	25	26.5	23.5	4	9.2	11.3
9001612B	MRF O M B 6 M5	M5	6	9	23.9	25	26.5	23.5	4	9.2	11.3
9001011C	MRF O M C 4 1/8	1/8	4	12	29.8	30.9	34	21.3	6	9.8	9.5
9001111V	MRF O M V 4 1/8	1/8	4	12	29.8	30.9	34	21.3	6	9.8	9.5
9001602B	MRF O M B 4 1/8	1/8	4	12	29.8	30.9	34	21.3	6	9.8	9.5
9001012C	MRF O M C 5 1/8	1/8	5	12	29.8	30.9	34	24.8	6	9.8	12
9001112V	MRF O M V 5 1/8	1/8	5	12	29.8	30.9	34	24.8	6	9.8	12
9001604B	MRF O M B 5 1/8	1/8	5	12	29.8	30.9	34	24.8	6	9.8	12
9001003C	MRF O M C 6 1/8	1/8	6	12	29.8	30.9	34	23	6	9.8	11.5
9001101V	MRF O M V 6 1/8	1/8	6	12	29.8	30.9	34	23	6	9.8	11.5
9001605B	MRF O M B 6 1/8	1/8	6	12	29.8	30.9	34	23	6	9.8	11.5
9001005C	MRF O M C 8 1/8	1/8	8	12	29.8	30.9	34	24.8	6	9.8	13.8
9001103V	MRF O M V 8 1/8	1/8	8	12	29.8	30.9	34	24.8	6	9.8	13.8
9001607B	MRF O M B 8 1/8	1/8	8	12	29.8	30.9	34	24.8	6	9.8	13.8
9001004C	MRF O M C 6 1/4	1/4	6	15	35.4	37	38.9	24.5	8	11.1	11.5
9001102V	MRF O M V 6 1/4	1/4	6	15	35.4	37	38.9	24.5	8	11.1	11.5
9001606B	MRF O M B 6 1/4	1/4	6	15	35.4	37	38.9	24.5	8	11.1	11.5
9001006C	MRF O M C 8 1/4	1/4	8	15	35.4	37	38.9	26.5	8	11.1	13.8
9001104V	MRF O M V 8 1/4	1/4	8	15	35.4	37	38.9	26.5	8	11.1	13.8
9001608B	MRF O M B 8 1/4	1/4	8	15	35.4	37	38.9	26.5	8	11.1	13.8
9001010C	MRF O M C 8 3/8	3/8	8	19	42.7	42.7	49.5	28.5	9	13.4	13.8
9001115V	MRF O M V 8 3/8	3/8	8	19	42.7	42.7	49.5	28.5	9	13.4	13.8
9001611B	MRF O M B 8 3/8	3/8	8	19	42.7	42.7	49.5	28.5	9	13.4	13.8
9001008C	MRF O M C 10 1/4	1/4	10	15	35.4	37	38.9	31.4	8	11.1	16.5
9001106V	MRF O M V 10 1/4	1/4	10	15	35.4	37	38.9	31.4	8	11.1	16.5
9001609B	MRF O M B 10 1/4	1/4	10	15	35.4	37	38.9	31.4	8	11.1	16.5
9001014C	MRF O M C 12 1/4	1/4	12	15	35.4	37	38.9	33	8	11.1	19.5
9001123V	MRF O M V 12 1/4	1/4	12	15	35.4	37	38.9	33	8	11.1	19.5
9001623B	MRF O M B 12 1/4	1/4	12	15	35.4	37	38.9	33	8	11.1	19.5
9001009C	MRF O M C 10 3/8	3/8	10	19	42.7	42.7	49.5	32.8	9	13.4	16
9001114V	MRF O M V 10 3/8	3/8	10	19	42.7	42.7	49.5	32.8	9	13.4	16
9001610B	MRF O M B 10 3/8	3/8	10	19	42.7	42.7	49.5	32.8	9	13.4	16
9001015C	MRF O M C 12 3/8	3/8	12	19	42.7	42.7	49.5	35.3	9	13.4	19.5
9001124V	MRF O M V 12 3/8	3/8	12	19	42.7	42.7	49.5	35.3	9	13.4	19.5
9001624B	MRF O M B 12 3/8	3/8	12	19	42.7	42.7	49.5	35.3	9	13.4	19.5
9001016C	MRF O M C 12 1/2	1/2	12	22	50.6	51.4	55.3	37	11	15.9	19.5
9001125V	MRF O M V 12 1/2	1/2	12	22	50.6	51.4	55.3	37	11	15.9	19.5
9001625B	MRF O M B 12 1/2	1/2	12	22	50.6	51.4	55.3	37	11	15.9	19.5
9001019C	MRF O M C 14 1/2	1/2	14	22	50.6	51.4	55.3	35	11	15.9	22
9001128V	MRF O M V 14 1/2	1/2	14	22	50.6	51.4	55.3	35	11	15.9	22
9001628B	MRF O M B 14 1/2	1/2	14	22	50.6	51.4	55.3	35	11	15.9	22

METAL WORK PNEUMATIC

MRF COMPACT "O" ANELLO IN OTTONE FILETTATO

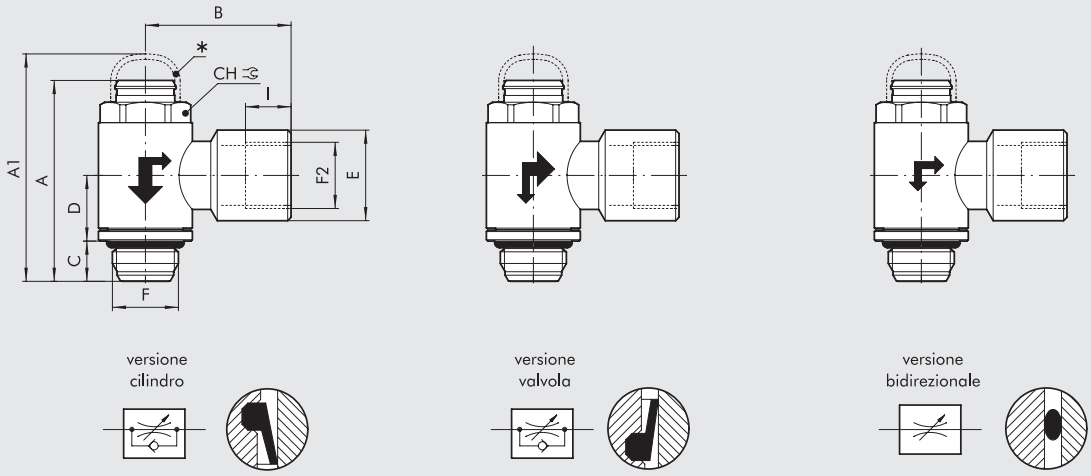

* CAPPUCCIO ANTIMANOMISSIONE OPZIONALE

Codice	Descrizione	F	F2	CH	A min	A max	A1	B	C	D	E	I
9001020C	MRF O F C 1/8 1/8	1/8	1/8	12	29.8	30.9	34	21.4	6	9.8	13.3	6.7
9001120V	MRF O F V 1/8 1/8	1/8	1/8	12	29.8	30.9	34	21.4	6	9.8	13.3	6.7
9001620B	MRF O F B 1/8 1/8	1/8	1/8	12	29.8	30.9	34	21.4	6	9.8	13.3	6.7
9001021C	MRF O F C 1/4 1/4	1/4	1/4	15	35.4	37	38.9	25.5	8	11.1	16.7	8
9001121V	MRF O F V 1/4 1/4	1/4	1/4	15	35.4	37	38.9	25.5	8	11.1	16.7	8
9001621B	MRF O F B 1/4 1/4	1/4	1/4	15	35.4	37	38.9	25.5	8	11.1	16.7	8
9001022C	MRF O F C 3/8 3/8	3/8	3/8	19	42.7	42.7	49.5	31.5	9	13.4	20.2	10
9001122V	MRF O F V 3/8 3/8	3/8	3/8	19	42.7	42.7	49.5	31.5	9	13.4	20.2	10
9001622B	MRF O F B 3/8 3/8	3/8	3/8	19	42.7	42.7	49.5	31.5	9	13.4	20.2	10
9001023C	MRF O F C 1/2 1/2	1/2	1/2	22	50.6	51.4	55.3	36	11	15.9	25.5	11
9001126V	MRF O F V 1/2 1/2	1/2	1/2	22	50.6	51.4	55.3	36	11	15.9	25.5	11
9001626B	MRF O F B 1/2 1/2	1/2	1/2	22	50.6	51.4	55.3	36	11	15.9	25.5	11

ACCESSORI MRF COMPACT "O"

CAPPUCCIO ANTIMANOMISSIONE

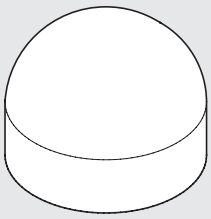

Codice	Descrizione
9090001	Cappuccio MRF O M5
9090002	Cappuccio MRF O 1/8-1/4
9090003	Cappuccio MRF O 3/8-1/2

NOTA: Regolare la portata mediante la taratura dello spillo.
Applicare il cappuccio antimanomissione premendo con forza, per impedire l'accesso allo spillo di regolazione.
Qualora si volesse ritarare l'MRF, togliere il cappuccio utilizzando delle pinze.
ATTENZIONE: una volta tolto, il cappuccio non é più riutilizzabile.

MRF COMPACT "N" ANELLO IN OTTONE

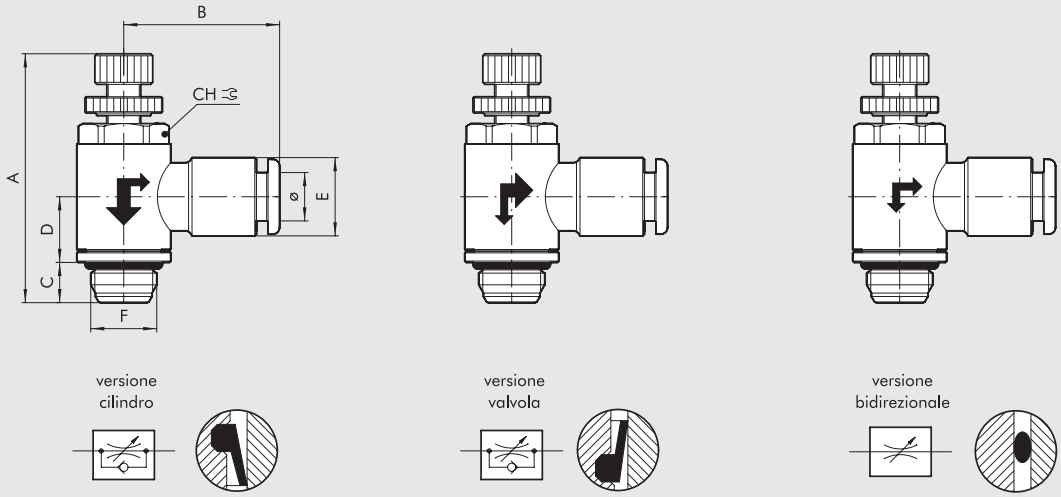

Codice	Descrizione	F	Ø	CH	A min	A max	B	C	D	E
9031001C	MRF N M C 4 M5	M5	4	9	27.7	31	20.2	4	9.2	9.5
9031101V	MRF N M V 4 M5	M5	4	9	27.7	31	20.2	4	9.2	9.5
9031201B	MRF N M B 4 M5	M5	4	9	27.7	31	20.2	4	9.2	9.5
9031003C	MRF N M C 5 M5	M5	5	9	27.7	31	23.8	4	9.2	12
9031103V	MRF N M V 5 M5	M5	5	9	27.7	31	23.8	4	9.2	12
9031203B	MRF N M B 5 M5	M5	5	9	27.7	31	23.8	4	9.2	12
9031005C	MRF N M C 6 M5	M5	6	9	27.7	31	23.5	4	9.2	11.3
9031105V	MRF N M V 6 M5	M5	6	9	27.7	31	23.5	4	9.2	11.3
9031205B	MRF N M B 6 M5	M5	6	9	27.7	31	23.5	4	9.2	11.3
9031002C	MRF N M C 4 1/8	1/8	4	12	33.5	37.6	21.3	6	9.8	9.5
9031102V	MRF N M V 4 1/8	1/8	4	12	33.5	37.6	21.3	6	9.8	9.5
9031202B	MRF N M B 4 1/8	1/8	4	12	33.5	37.6	21.3	6	9.8	9.5
9031004C	MRF N M C 5 1/8	1/8	5	12	33.5	37.6	24.8	6	9.8	12
9031104V	MRF N M V 5 1/8	1/8	5	12	33.5	37.6	24.8	6	9.8	12
9031204B	MRF N M B 5 1/8	1/8	5	12	33.5	37.6	24.8	6	9.8	12
9031006C	MRF N M C 6 1/8	1/8	6	12	33.5	37.6	23	6	9.8	11.5
9031106V	MRF N M V 6 1/8	1/8	6	12	33.5	37.6	23	6	9.8	11.5
9031206B	MRF N M B 6 1/8	1/8	6	12	33.5	37.6	23	6	9.8	11.5
9031008C	MRF N M C 8 1/8	1/8	8	12	33.5	37.6	24.8	6	9.8	13.8
9031108V	MRF N M V 8 1/8	1/8	8	12	33.5	37.6	24.8	6	9.8	13.8
9031208B	MRF N M B 8 1/8	1/8	8	12	33.5	37.6	24.8	6	9.8	13.8
9031007C	MRF N M C 6 1/4	1/4	6	15	38.8	43.7	24.5	8	11.1	11.5
9031107V	MRF N M V 6 1/4	1/4	6	15	38.8	43.7	24.5	8	11.1	11.5
9031207B	MRF N M B 6 1/4	1/4	6	15	38.8	43.7	24.5	8	11.1	11.5
9031009C	MRF N M C 8 1/4	1/4	8	15	38.8	43.7	26.5	8	11.1	13.8
9031109V	MRF N M V 8 1/4	1/4	8	15	38.8	43.7	26.5	8	11.1	13.8
9031209B	MRF N M B 8 1/4	1/4	8	15	38.8	43.7	26.5	8	11.1	13.8
9031010C	MRF N M C 8 3/8	3/8	8	19	47.2	52	28.5	9	13.4	13.8
9031110V	MRF N M V 8 3/8	3/8	8	19	47.2	52	28.5	9	13.4	13.8
9031210B	MRF N M B 8 3/8	3/8	8	19	47.2	52	28.5	9	13.4	13.8
9031011C	MRF N M C 10 1/4	1/4	10	15	38.8	43.7	31.4	8	11.1	16.5
9031111V	MRF N M V 10 1/4	1/4	10	15	38.8	43.7	31.4	8	11.1	16.5
9031211B	MRF N M B 10 1/4	1/4	10	15	38.8	43.7	31.4	8	11.1	16.5
9031014C	MRF N M C 12 1/4	1/4	12	15	38.8	43.7	33	8	11.1	19.5
9031114V	MRF N M V 12 1/4	1/4	12	15	38.8	43.7	33	8	11.1	19.5
9031214B	MRF N M B 12 1/4	1/4	12	15	38.8	43.7	33	8	11.1	19.5
9031012C	MRF N M C 10 3/8	3/8	10	19	47.2	52	32.8	9	13.4	16
9031112V	MRF N M V 10 3/8	3/8	10	19	47.2	52	32.8	9	13.4	16
9031212B	MRF N M B 10 3/8	3/8	10	19	47.2	52	32.8	9	13.4	16
9031015C	MRF N M C 12 3/8	3/8	12	19	47.2	52	35.3	9	13.4	19.5
9031115V	MRF N M V 12 3/8	3/8	12	19	47.2	52	35.3	9	13.4	19.5
9031215B	MRF N M B 12 3/8	3/8	12	19	47.2	52	35.3	9	13.4	19.5
9031016C	MRF N M C 12 1/2	1/2	12	22	53	59.8	37	11	15.9	19.5
9031116V	MRF N M V 12 1/2	1/2	12	22	53	59.8	37	11	15.9	19.5
9031216B	MRF N M B 12 1/2	1/2	12	22	53	59.8	37	11	15.9	19.5
9031019C	MRF N M C 14 1/2	1/2	14	22	53	59.8	35	11	15.9	22
9031119V	MRF N M V 14 1/2	1/2	14	22	53	59.8	35	11	15.9	22
9031219B	MRF N M B 14 1/2	1/2	14	22	53	59.8	35	11	15.9	22

METAL WORK PNEUMATIC

MRF COMPACT "N" ANELLO IN OTTONE FILETTATO

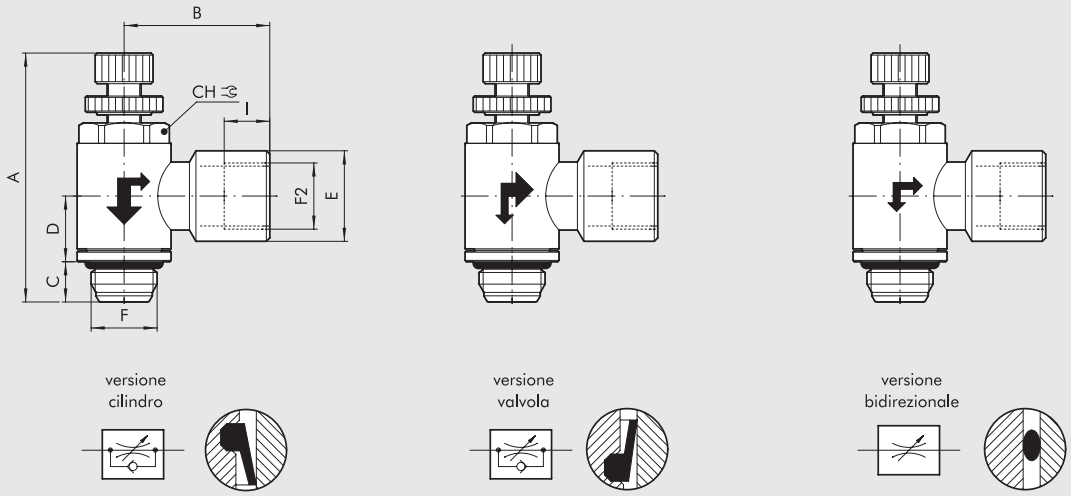

Codice	Descrizione	F	F2	CH	A min	A max	B	C	D	E	I
9031301C	MRF N F C 1/8 1/8	1/8	1/8	12	33.5	37.6	21.4	6	9.8	13.3	6.7
9031401V	MRF N F V 1/8 1/8	1/8	1/8	12	33.5	37.6	21.4	6	9.8	13.3	6.7
9031501B	MRF N F B 1/8 1/8	1/8	1/8	12	33.5	37.6	21.4	6	9.8	13.3	6.7
9031302C	MRF N F C 1/4 1/4	1/4	1/4	15	38.8	43.7	25.5	8	11.1	16.7	8
9031402V	MRF N F V 1/4 1/4	1/4	1/4	15	38.8	43.7	25.5	8	11.1	16.7	8
9031502B	MRF N F B 1/4 1/4	1/4	1/4	15	38.8	43.7	25.5	8	11.1	16.7	8
9031303C	MRF N F C 3/8 3/8	3/8	3/8	19	47.2	52	31.5	9	13.4	20.2	10
9031403V	MRF N F V 3/8 3/8	3/8	3/8	19	47.2	52	31.5	9	13.4	20.2	10
9031503B	MRF N F B 3/8 3/8	3/8	3/8	19	47.2	52	31.5	9	13.4	20.2	10
9031304C	MRF N F C 1/2 1/2	1/2	1/2	22	53	59.8	36	11	15.9	25.5	11
9031404V	MRF N F V 1/2 1/2	1/2	1/2	22	53	59.8	36	11	15.9	25.5	11
9031504B	MRF N F B 1/2 1/2	1/2	1/2	22	53	59.8	36	11	15.9	25.5	11

METAL WORK PNEUMATIC

VALVOLA DI BLOCCO BIDIREZIONALE TUBO

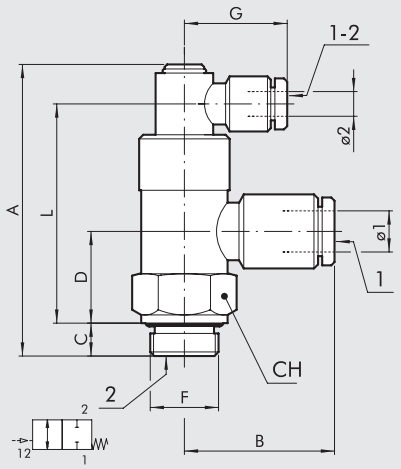

Codice	Descrizione	F	Ø 1	Ø 2	A	B	C	D	G	L	CH
W6001101106	STP-B 1/8 006	G 1/8	6	4	57.5	25	6.9	16	25	41.9	14
W6001111106	STP-B 1/4 006	G 1/4	6	4	65.7	27.5	8	19.5	25	48.1	17
W6001111108	STP-B 1/4 008	G 1/4	8	4	65.7	32	8	19.5	25	48.1	17
W6001121108	STP-B 3/8 008	G 3/8	8	4	70.9	31.5	8	22.3	25	53.3	22
W6001121110	STP-B 3/8 010	G 3/8	10	4	70.9	36.5	8	22.3	25	53.3	22
W6001131112	STP-B 1/2 012	G 1/2	12	4	83.5	41.5	12	27	25	71.5	27

VALVOLA DI BLOCCO UNIDIREZIONALE FILETTO

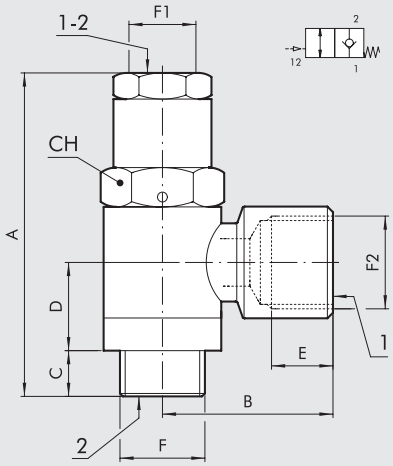

Codice	Descrizione	F	F2	A	B	C	D	E	F1	CH
W6001001001	STP-U 1/8 108	G 1/8	G 1/8	43.5	21.5	6	13	7	M5	14
W6001011011	STP-U 1/4 114	G 1/4	G 1/4	49.5	25.5	7	13.5	8	G 1/8	17
W6001021021	STP-U 3/8 138	G 3/8	G 3/8	54.9	31	9	15	10	G 1/8	19
W6001031031	STP-U 1/2 112	G 1/2	G 1/2	61.5	40	10	17	14	G 1/8	24
W6001041041	STP-U 3/4 134	G 3/4	G 3/4	69	39	12	18.5	14	G 1/8	36

VALVOLA DI BLOCCO UNIDIREZIONALE TUBO

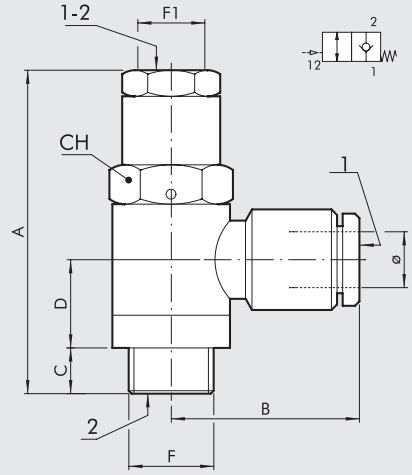

Codice	Descrizione	F	Ø	A	B	C	D	F1	CH
W6001001106	STP-U 1/8 006	G 1/8	6	43.5	25	6	13	M5	14
W6001011106	STP-U 1/4 006	G 1/4	6	49.5	27.5	7	13.5	G 1/8	17
W6001011108	STP-U 1/4 008	G 1/4	8	49.5	32	7	13.5	G 1/8	17
W6001021108	STP-U 3/8 008	G 3/8	8	54.9	31.5	9	15	G 1/8	19
W6001021110	STP-U 3/8 010	G 3/8	10	54.9	36.5	9	15	G 1/8	19
W6001031112	STP-U 1/2 012	G 1/2	12	61.4	41.5	10	17	G 1/8	24